# F2A BUFFALO

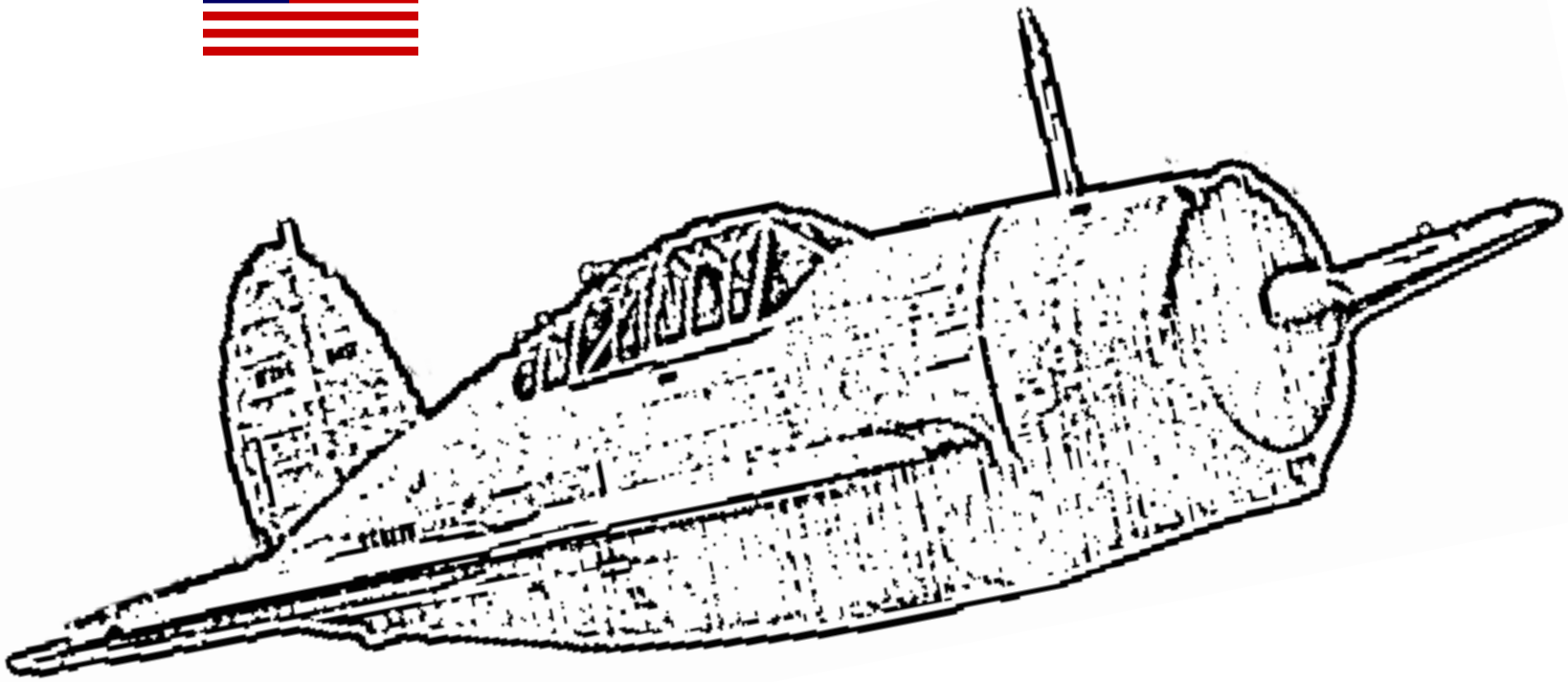

PEARL HARBOR
AVIATION MUSEUM

# TBF AVENGER

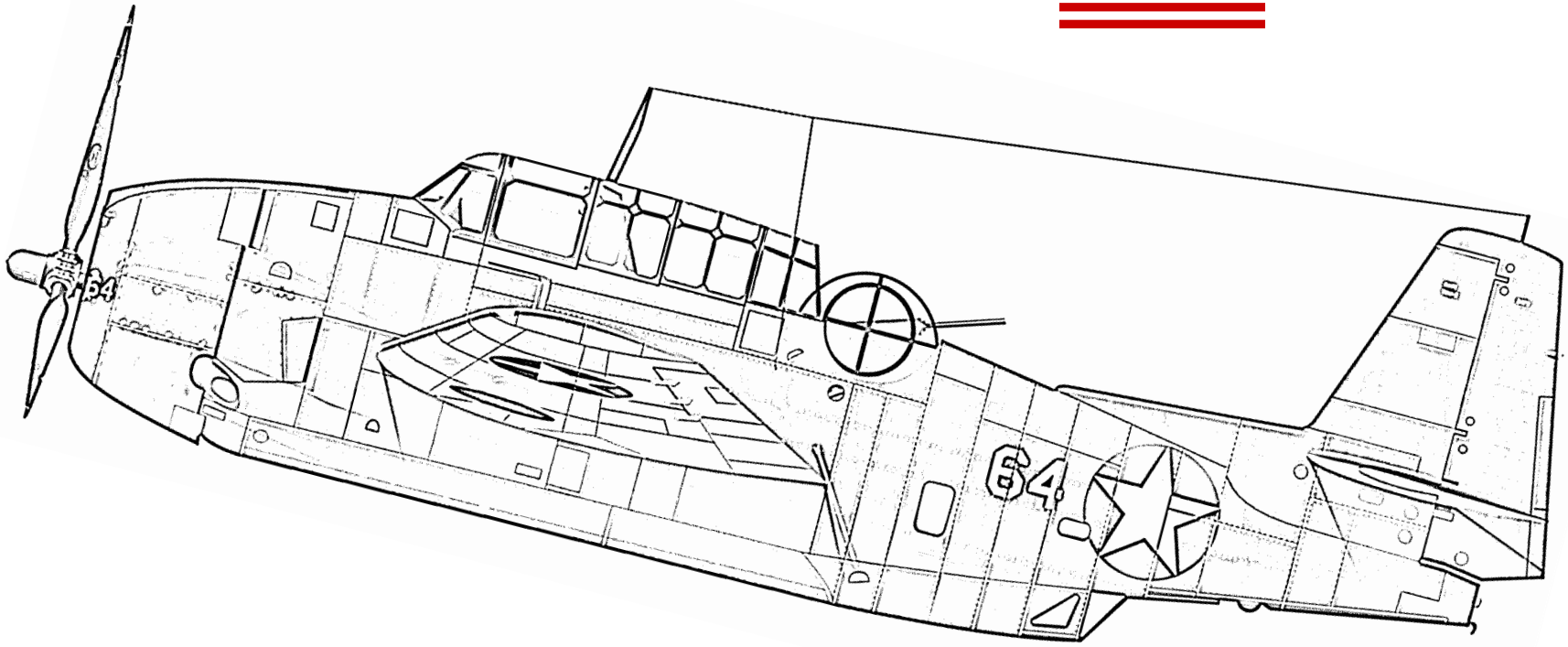


PEARL HARBOR
AVIATION MUSEUM

# SBD DAUNTLESS

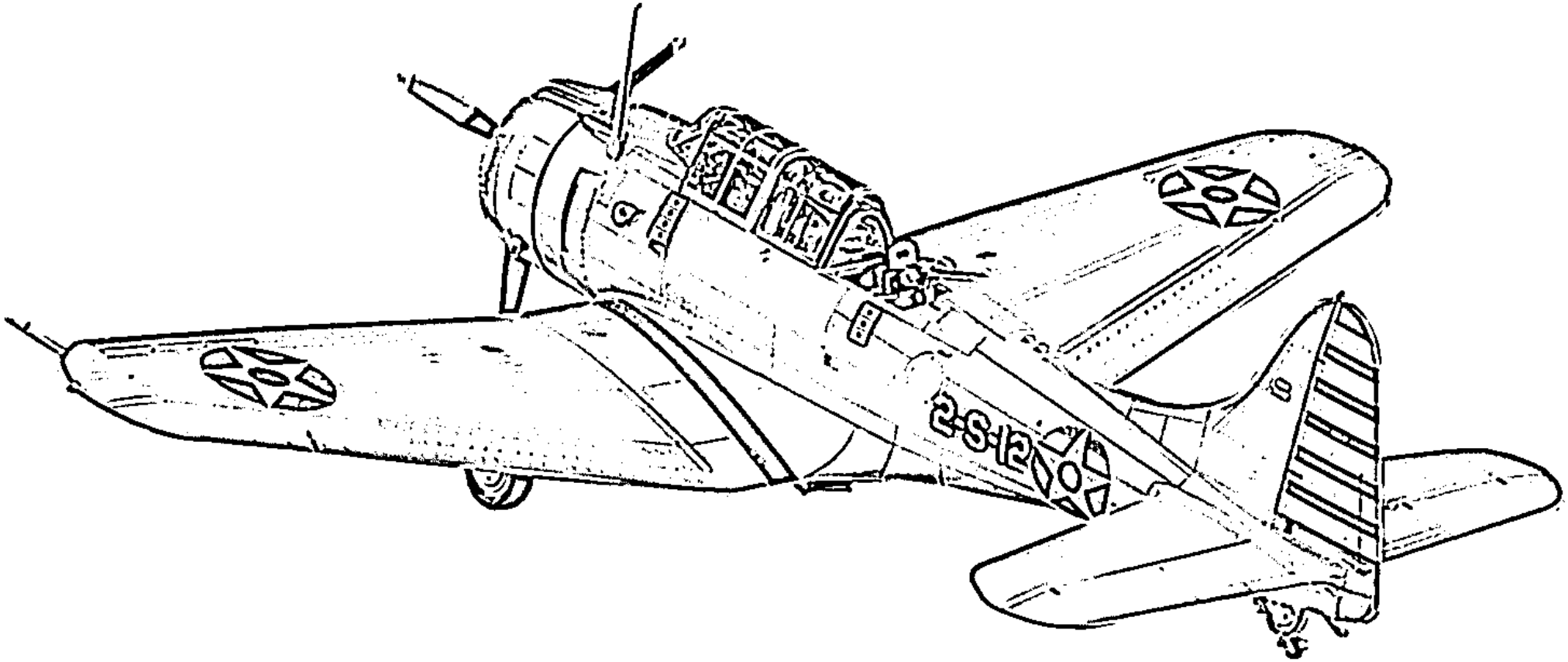


PEARL HARBOR
AVIATION MUSEUM

# SB2U VINDICATOR

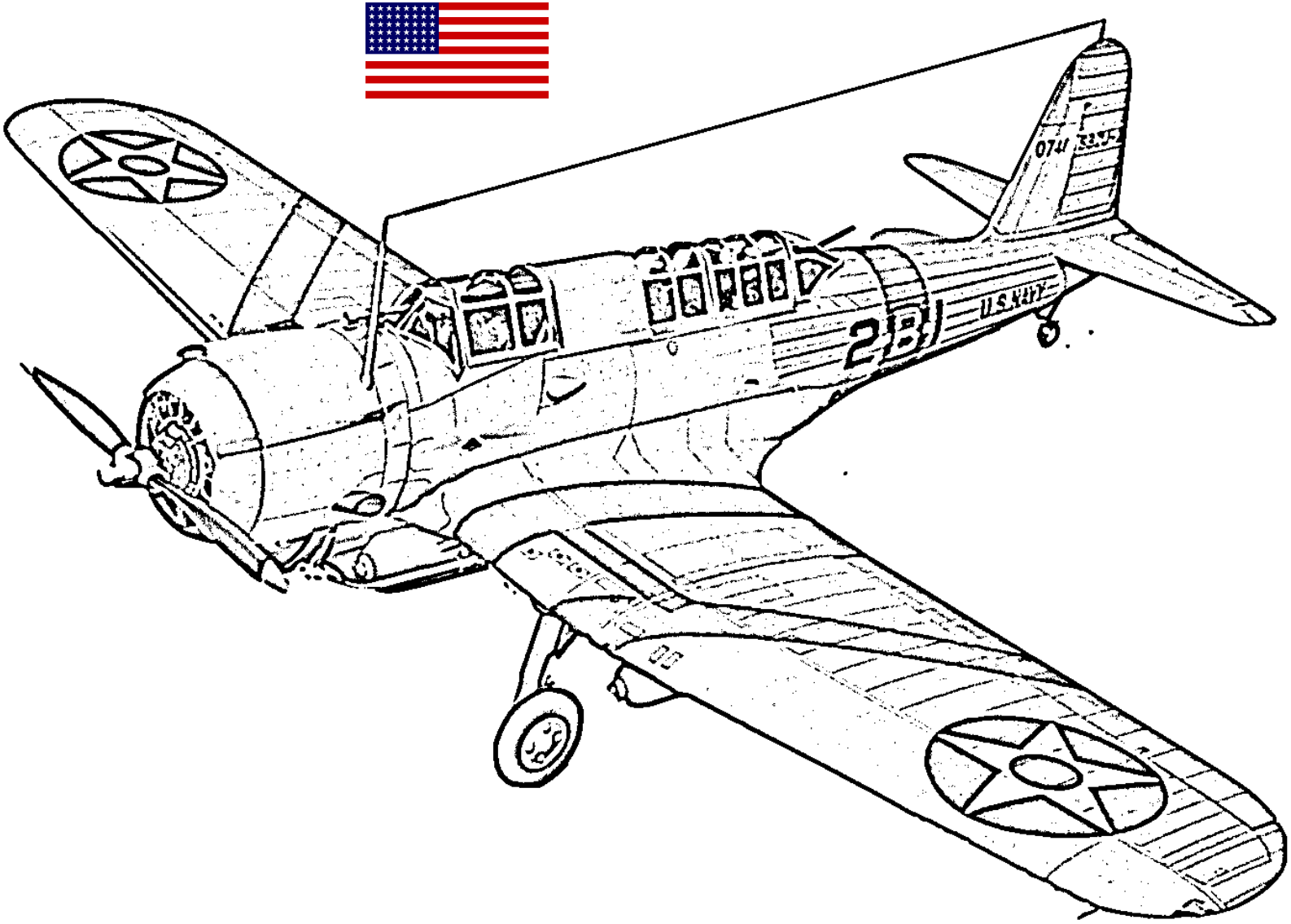


PEARL HARBOR
AVIATION MUSEUM

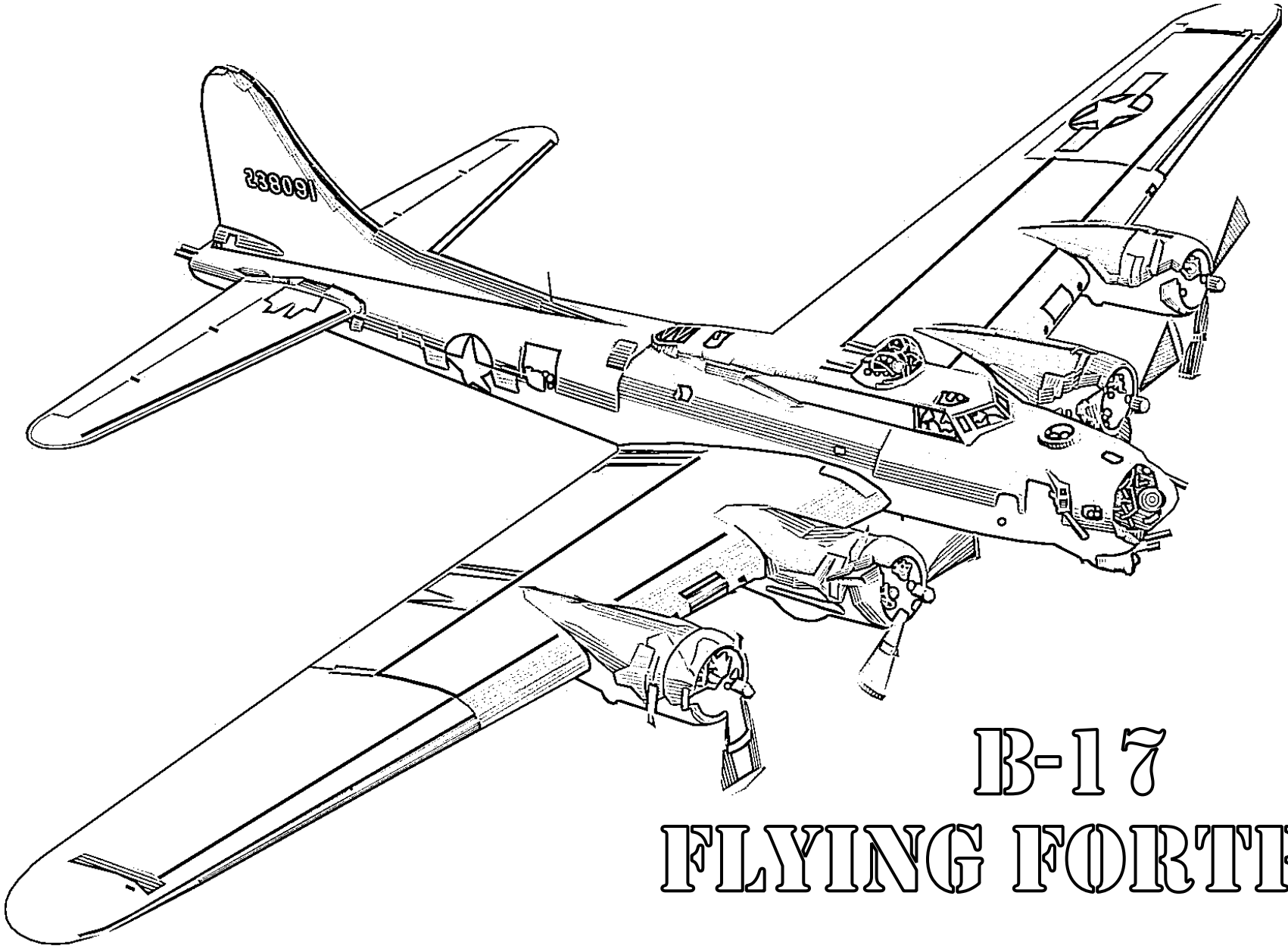


# B-17
# FLYING FORTRESS

PEARL HARBOR
AVIATION MUSEUM

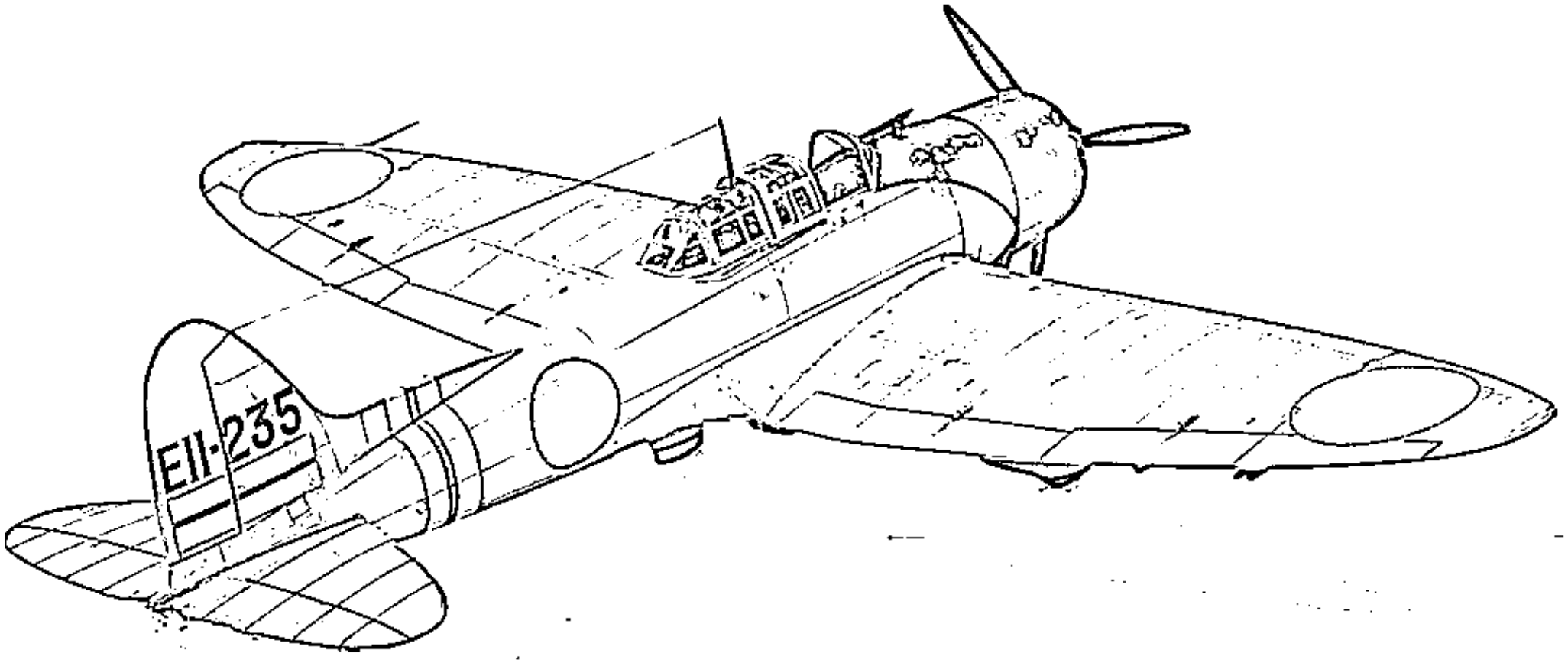


# D3A VAL

PEARL HARBOR
AVIATION MUSEUM

# A6M ZERO

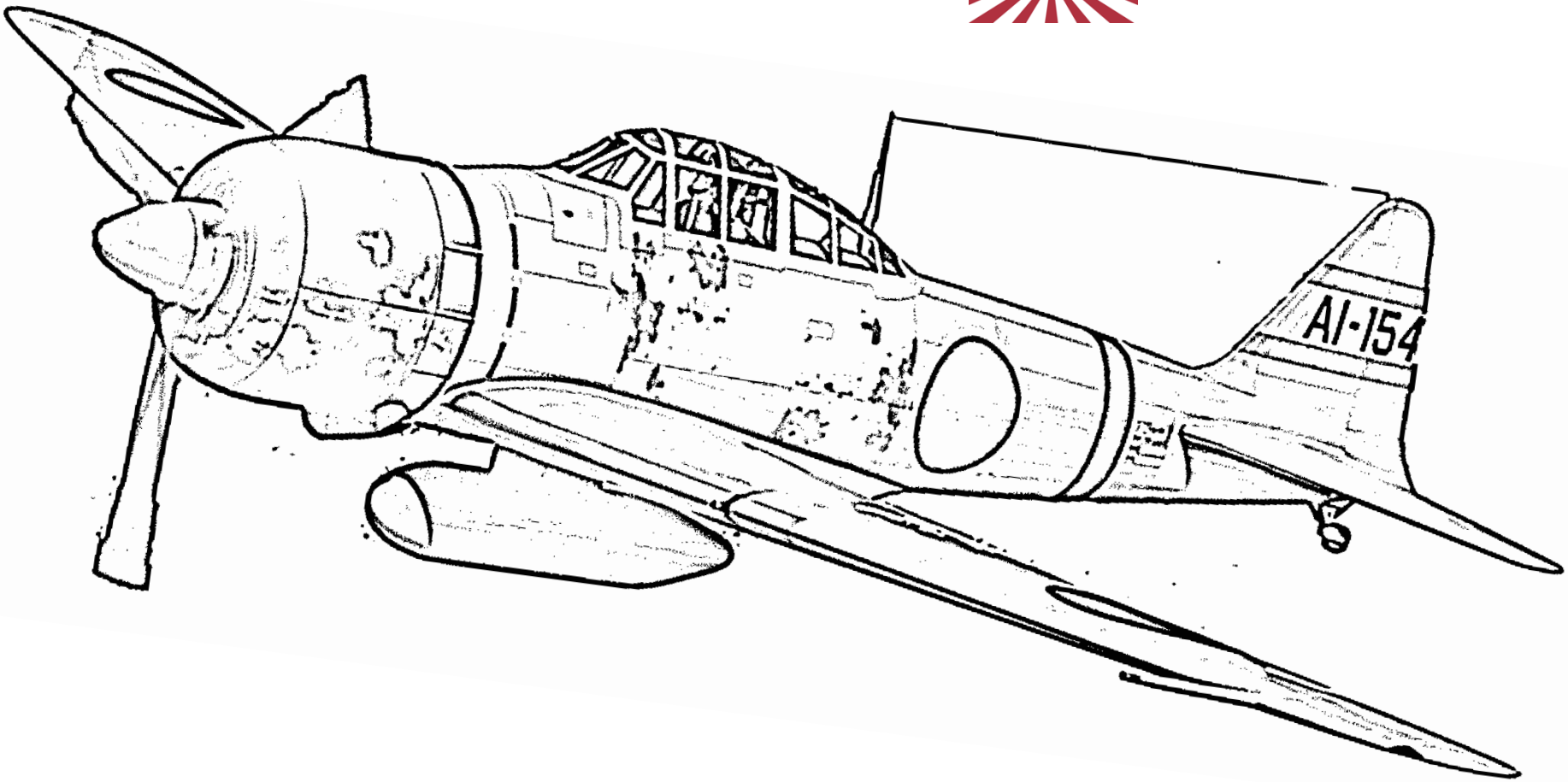


PEARL HARBOR
AVIATION MUSEUM

# B5N KATE



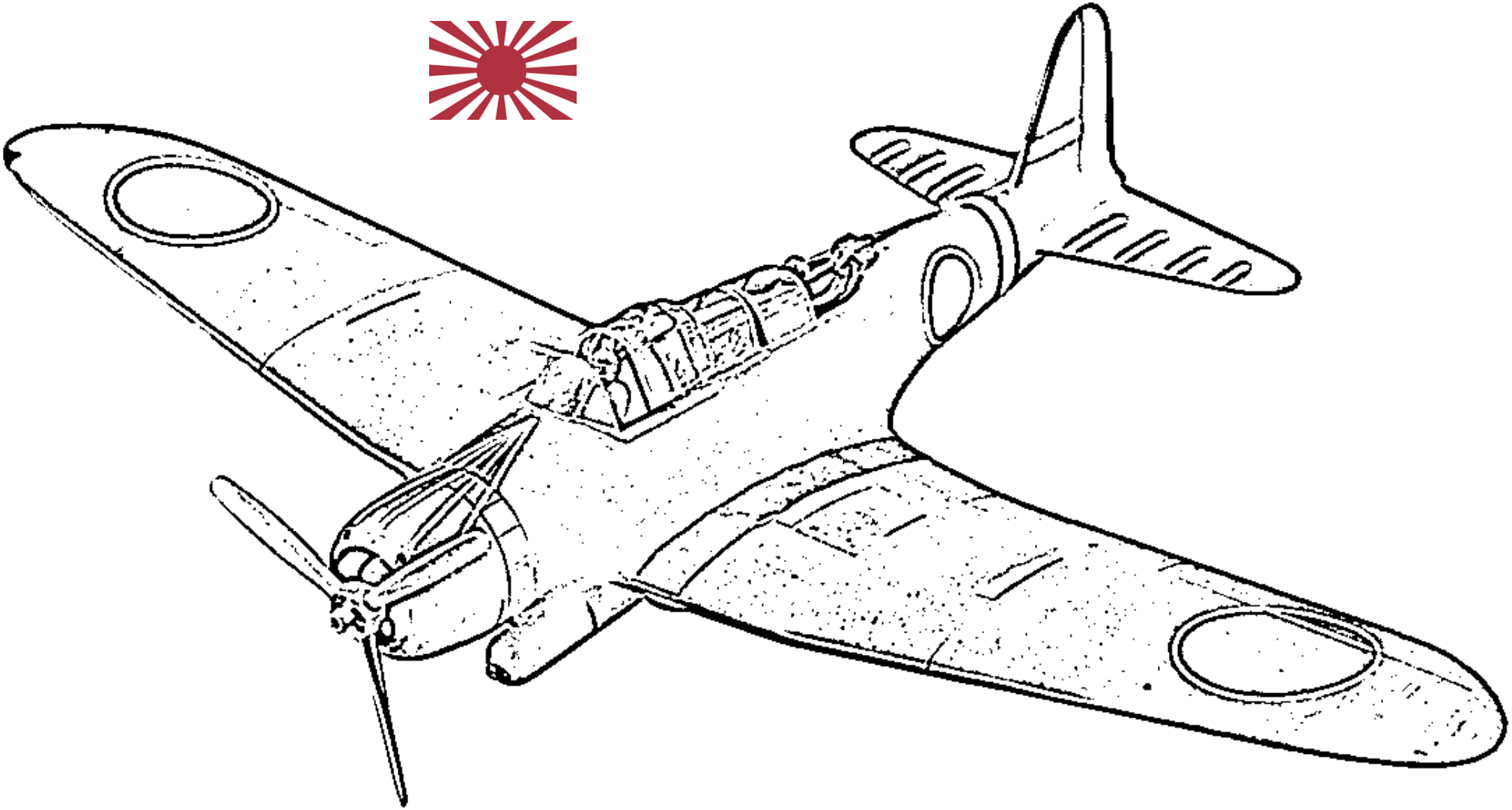

PEARL HARBOR
AVIATION MUSEUM